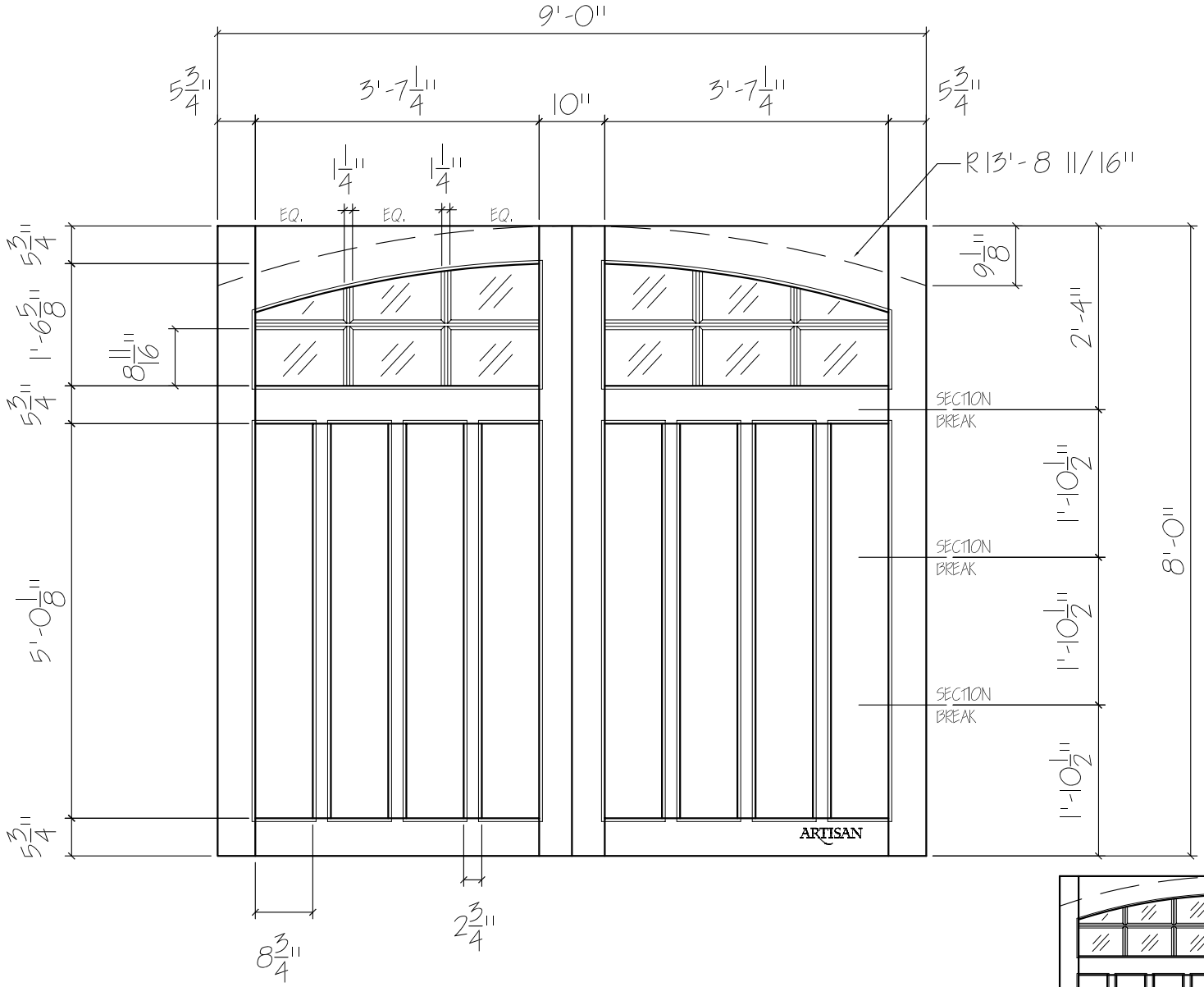

DT-SW-9x8-12L-AT-8FP

FRONT ELEVATION, DUET

SCALE: 1/ 2" = 1'-0"

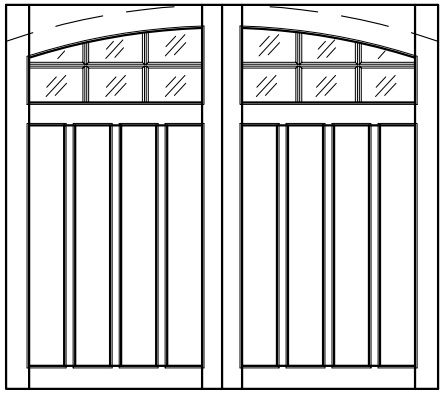

SCALE: 1/ 4" = 1' -0"

Drawing #:

Date:

Drawn By:

Ordered:

Dealer:

Job Name:

Other:

Approved By:

ARTISAN CUSTOM DOORWORKS
975 Hemlock Rd., Morgantown, PA. 19543
T - 888-913-9170 F - 888-913-9179

01