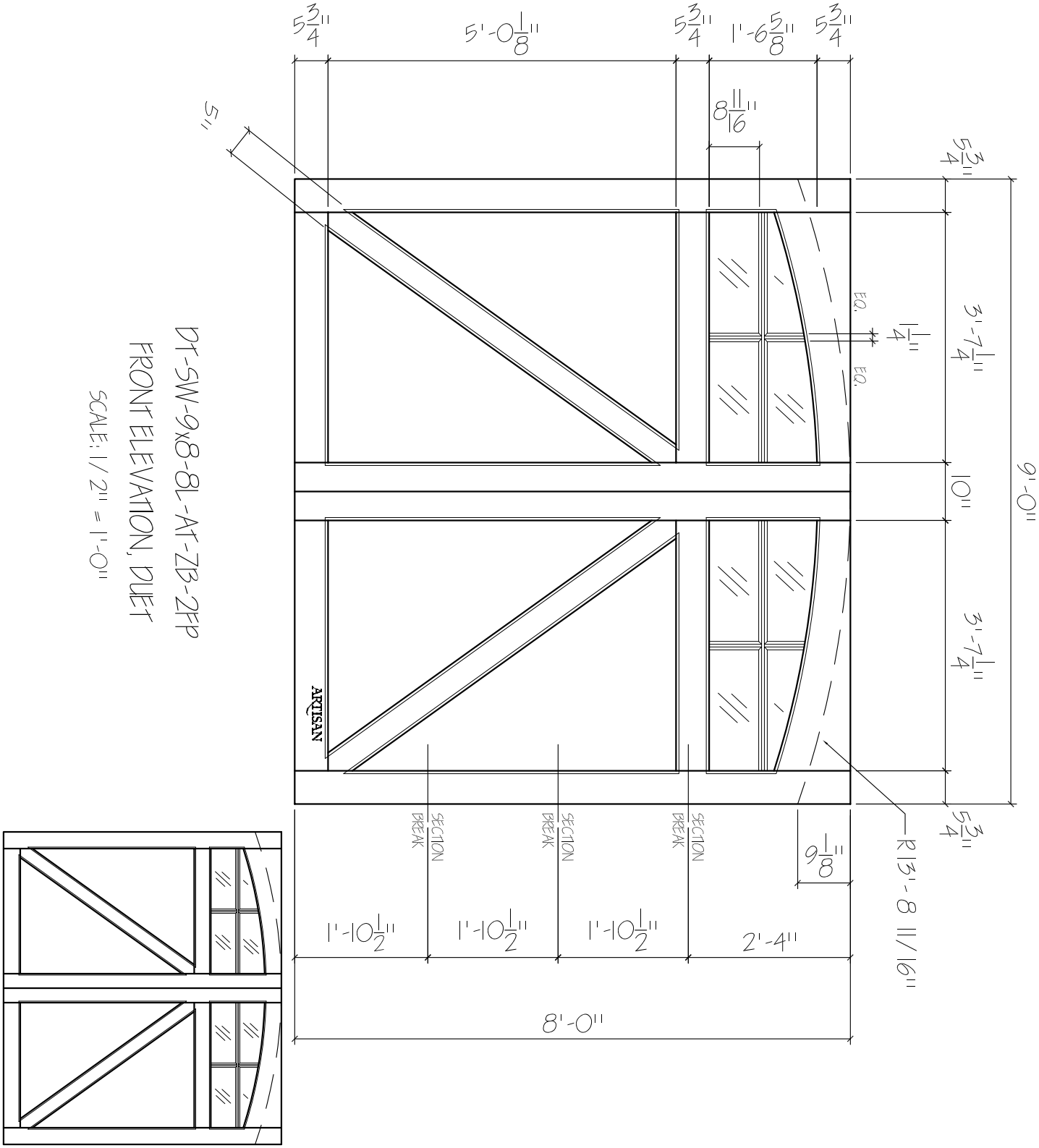

DT-SW-9x8-8L-AT-ZB-2FP
FRONT ELEVATION, DUET
SCALE: 1/2" = 1'-0"

SCALE: 1/4" = 1'-0"

01

ARTISAN
CUSTOM DOORWORKS
975 Hemlock Rd., Morgantown, PA. 19543
T - 888-913-9170 F - 888-913-9179

Dealer:	Drawing #:
Job Name:	Date:
Other:	Drawn By:
Approved By:	Ordered: