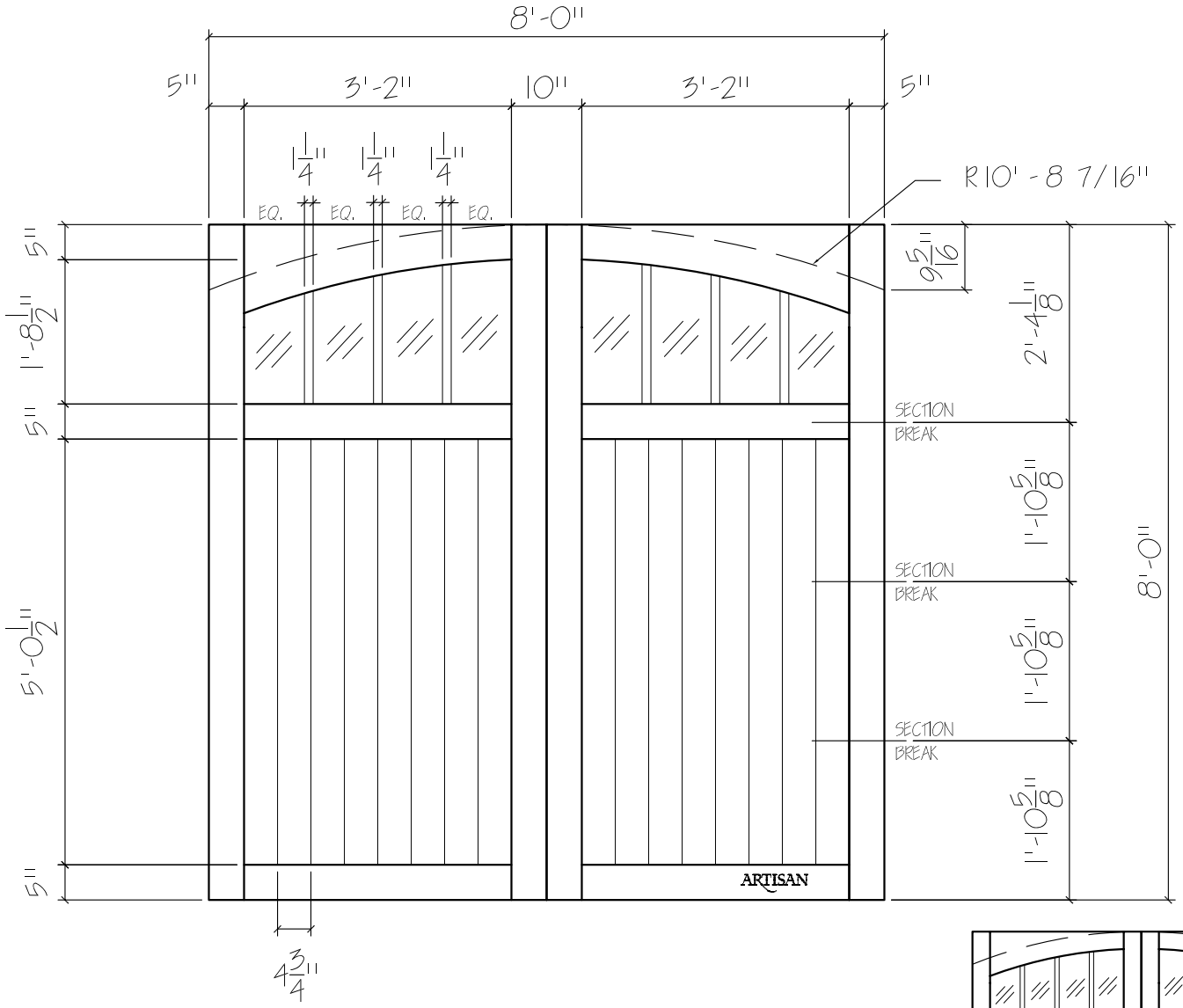

FP-SW-8x8-8L-AT-2BP

FRONT ELEVATION, FAIRPORT

SCALE: 1/2" = 1'-0"

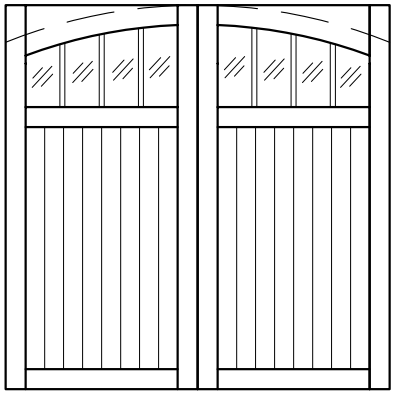

SCALE: 1/4" = 1'-0"

Drawing #:

Date:

Drawn By:

Ordered:

Dealer:

Job Name:

Other:

Approved By:

ARTISAN CUSTOM DOORWORKS
975 Hemlock Rd., Morgantown, PA. 19543
T - 888-913-9170 F - 888-913-9179

01