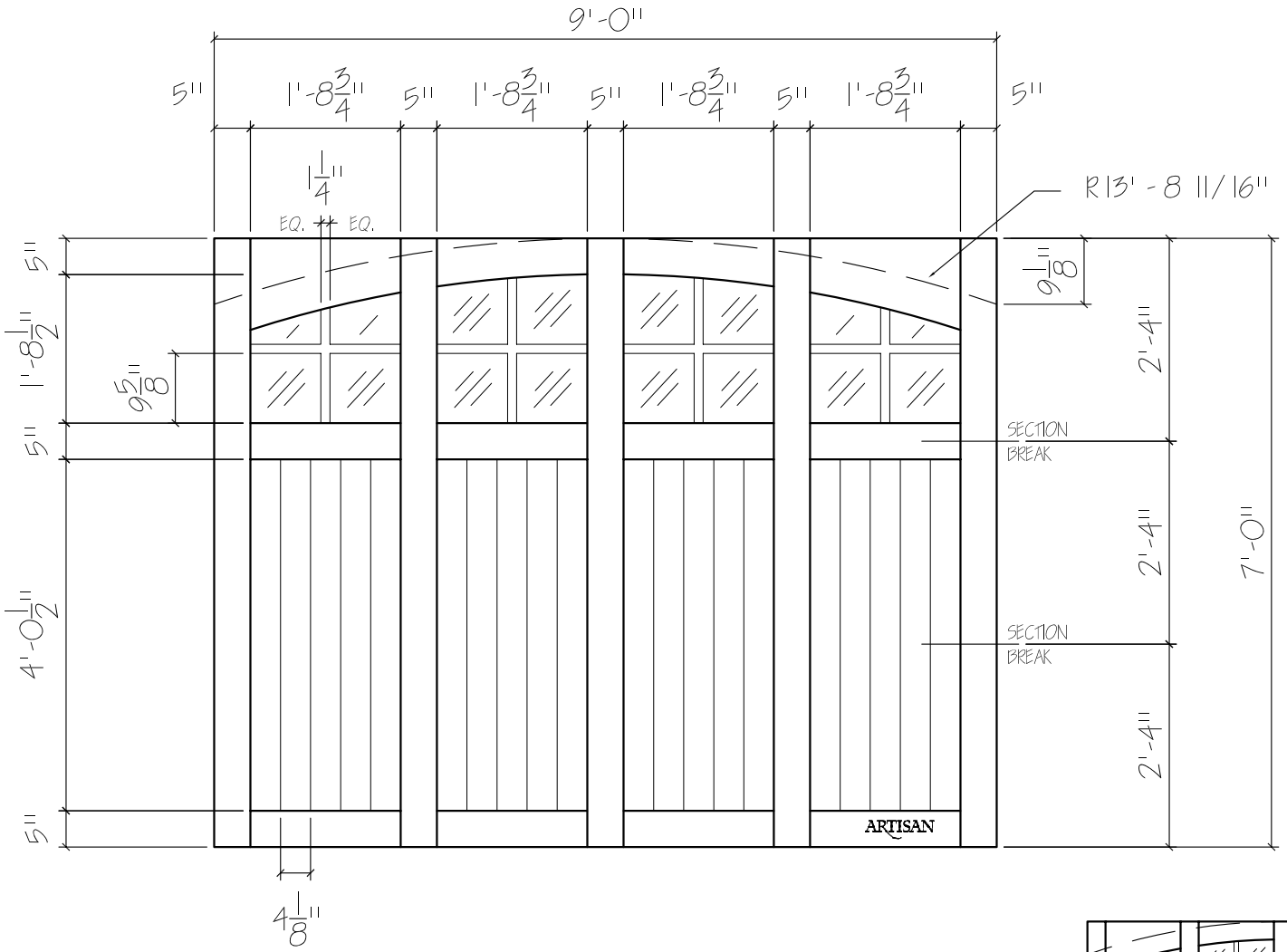

NP-BF-9x7-16L-AT-4VP

FRONT ELEVATION, NEWPORT

SCALE: 1/2" = 1'-0"

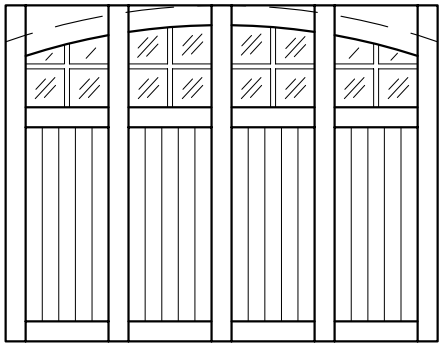

SCALE: 1/4" = 1'-0"

Drawing #:	
Date:	
Drawn By:	
Ordered:	
Dealer:	
Job Name:	
Other:	
Approved By:	

ARTISAN CUSTOM DOORWORKS
975 Hemlock Rd., Morgantown, PA. 19543
T - 888-913-9170 F - 888-913-9179