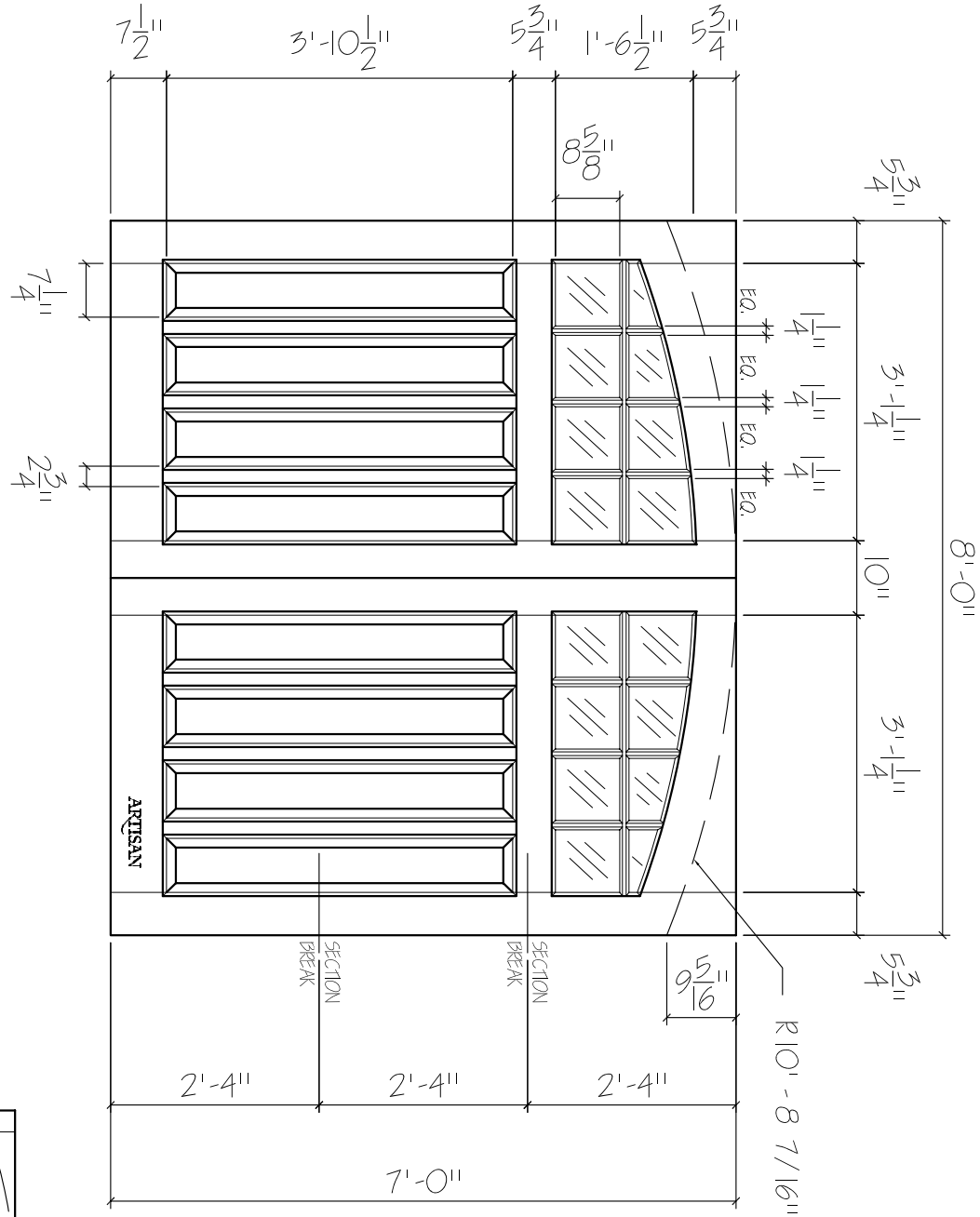

SY-SW-8x7-16L-AT-8RP

FRONT ELEVATION, SYMPHONY

SCALE: 1/2" = 1'-0"

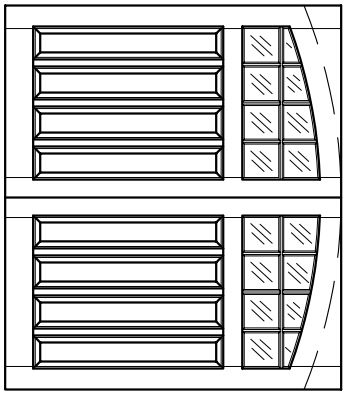

SCALE: 1/4" = 1'-0"

01

ARTISAN
CUSTOM DOORWORKS
975 Hemlock Rd., Morgantown, PA. 19543
T - 888-913-9170 F - 888-913-9179

Dealer:	Drawing #:
Job Name:	Date :
Other:	Drawn By:
Approved By:	Ordered: